Infrared Detection with Low-Cost Micro-Mirror Sensor

Mathias Holz

Ilmenau University of Technology
Faculty of Electrical Engineering and Information Technology
Dept. of Microelectronic and Nanoelectronic Systems
Gustav-Kirchhoff-Str. 1
D-98684 Ilmenau

E-Mail: mathias.holz@tu-ilmenau.de

Ilmenau University of Technology

WELCOME

ZMN

Cleeanroom Class 1000: 1300 m²

Cleanroom Class 100: 700 m²

40 Departments

(Since 2002)

Infrared-Technologies

- Market: 2.5 B US$, +10% p.a.

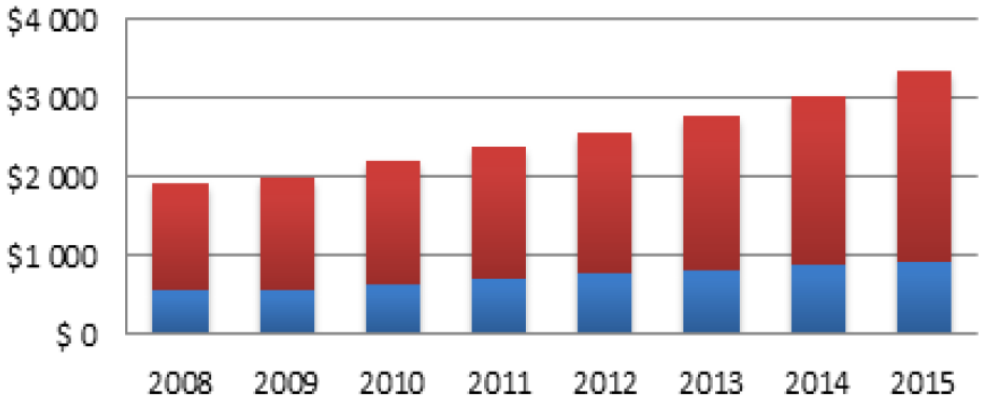

E. Mounier, *Proc. SPIE* 8012 (2011)

- Dominant Technology: Microbolometer

- Bolometer-Technology known by only 8 Companies worldwide: 75% from USA and military

Why Low-Cost Infrared Technologies?

- The University of Technology Ilmenau has developed an alternative infrared detector technology for the consumer market
- There is a unique opportunity to bring this technology on the market

The Working Principle

- The system is based on a thermo-mechanical micro-mirror sensor, which moves direct proportional to the infrared intensity (7-14µm).
- The deflection is converted by reflected cold light (LED) and a conventional (low-cost) CCD chip into a visual image (30 frames / sec).

Working Prinziple

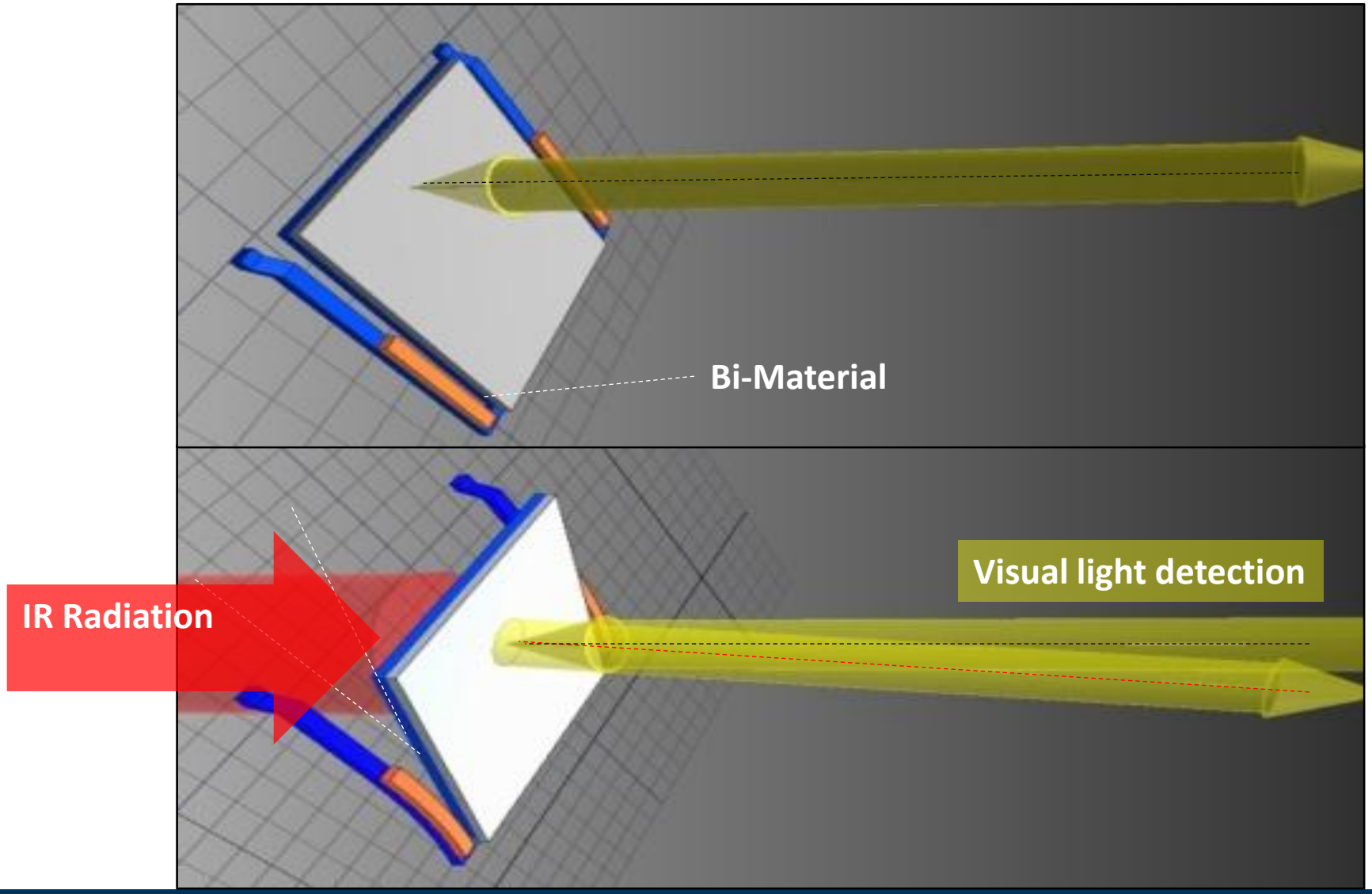

IR Micro-Mirror Array

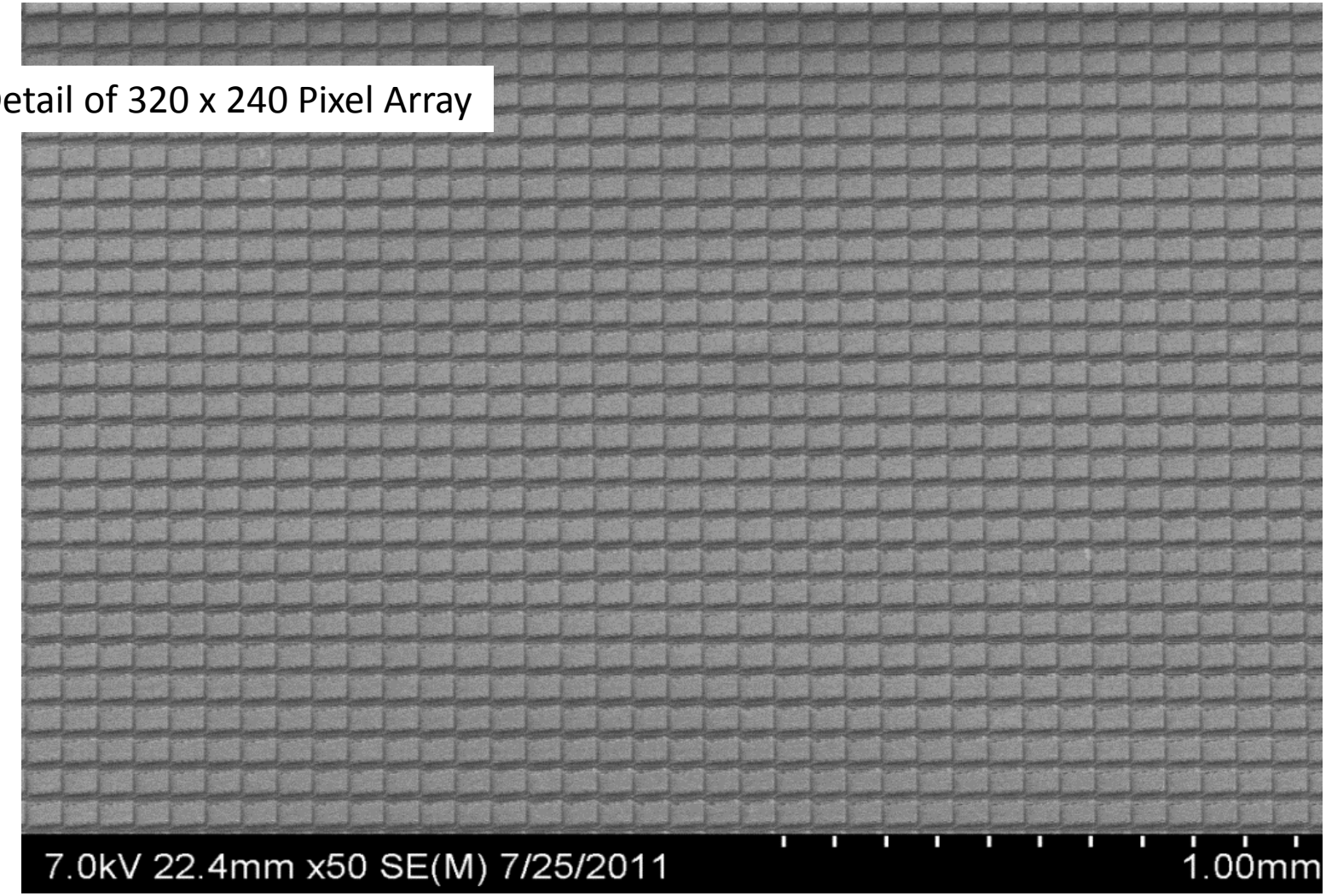

Sensor-Module with IR-Optics

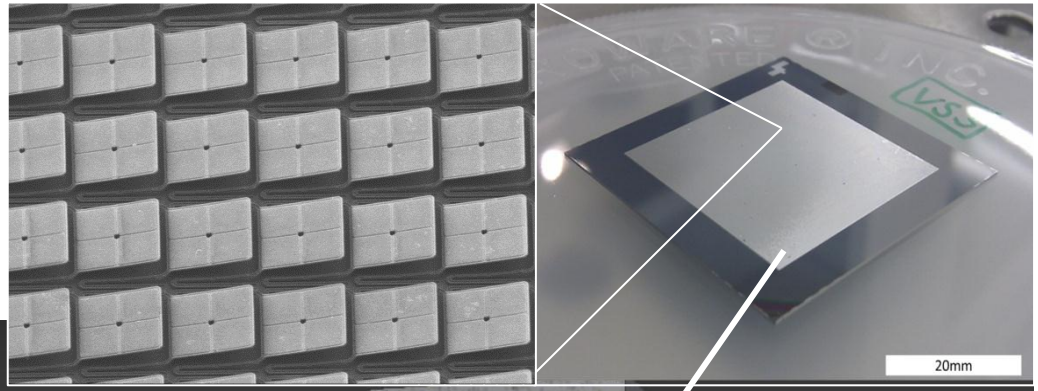

IR

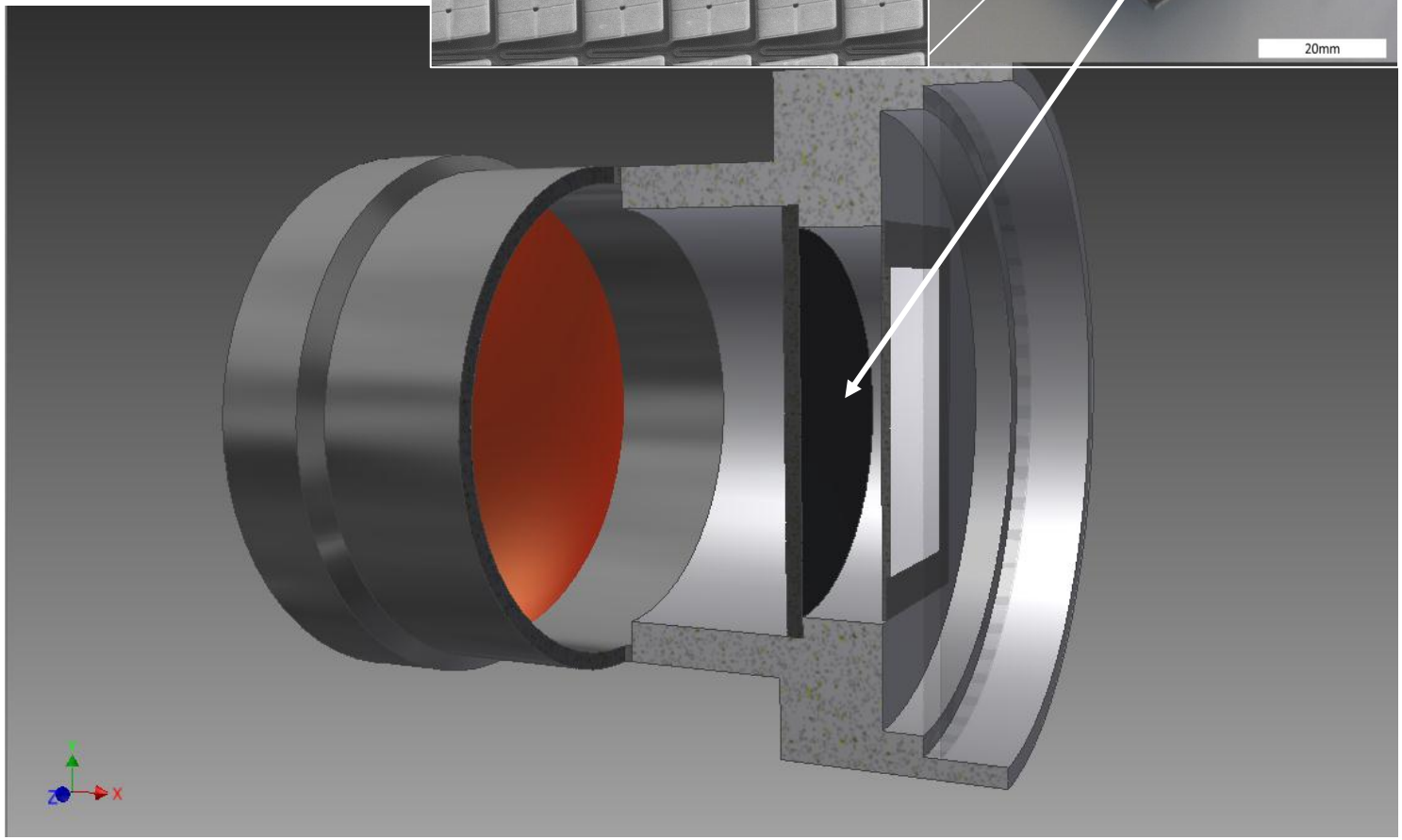

Working Principle: The Detector (4f)

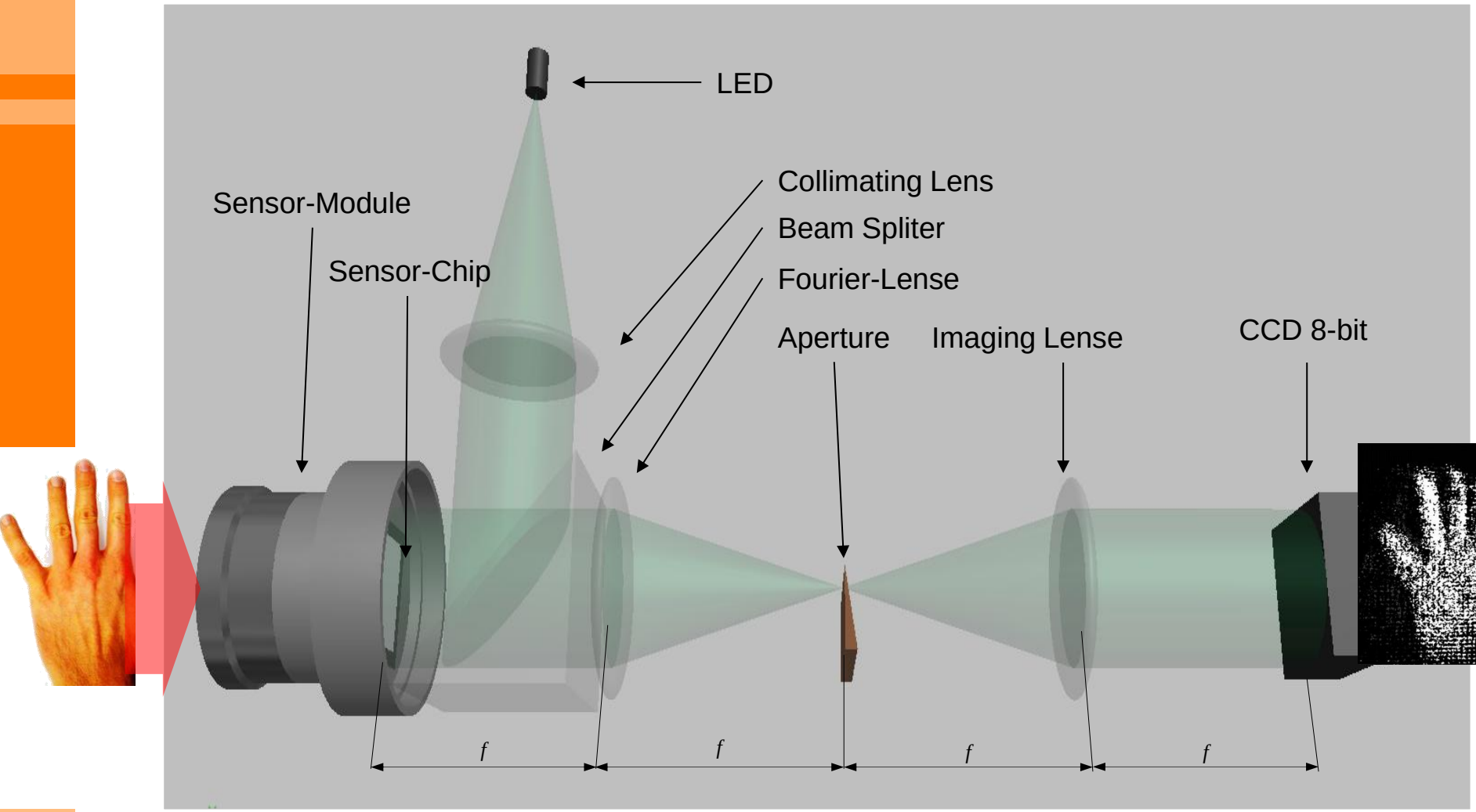

Performance / Video

Properties		
	Realized	**Potential**
Format [Pixel]	40 x 30	640 x 480*
NETD [mK]	560	<100
T.-Measurement Range[K]	150	>800
Pixel-Pitch [µm]	100	>50*
Imaging Rate [Hz]	30	60
Grayscale [bit]	8	16
**already realized*		

Calculated approach: further miniaturization

With Micro-Lens Arrays

Actual Concept: Private Security Systems

Properties: 320 x 240 Pixel, 50 µm Pitch, NETD <0,5 K, 30 Hz, 12 Bit

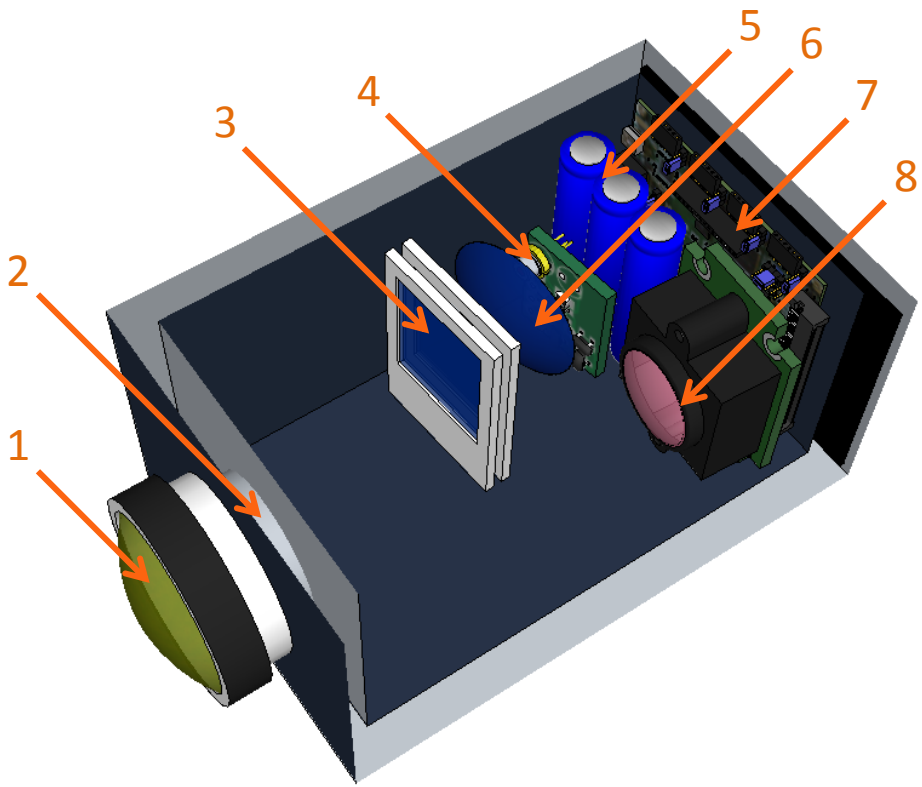

Nr.	Position
1	IR Optics (PE)
2	IR Sensor
3	Microlense-Array
4	Laser Diode
5	Battery
6	Lens
7	Elektronics
8	CCD (12bit)
9	Housing

Prototype- Series. <100€

Application of the low-cost IR Cam

Household and Consumer: <1000 € Thermographic Cam

Private security service: Thermographic Survailance System

Fire alarm : 50…100 € Product instead of smoke detectors

Energy sector: Energy savings through thermal observation

Traffic Safety: Pedestrian safety (traffic lights) by ThermoCams

Automotive: „with reservations“

Project Overview

Objective: Realize a <400€ IR Cam Protyotype for Mass Production within 2 Years!

Ressource planning:

Team #	*Thematics*	*Department*	*Resources [MA]*
1	Sensor	TUI: MNES	4
2	Optics	TUI: Techn. Optics	3
3	Systemintegration / Packaging	Company 1 / 2	3
4	Software / Signal Processing	Company 1 / 2	4
5	Foundary	?	5
6	Start-Up	?	3

Projektvolumen: 6,5 Mio. €

Technology Required for Sensor Production

Standard Equipment (Class 10,000 – 100)

1. **Lithography (0.5 µm)**
2. **PECVD (or LPCVD) Deposition**
3. **RIE**
4. **Sputter**
5. **Standard Wet Chemistry (Resist Remover, etc.)**

(3-5 Lithographic steps only!)
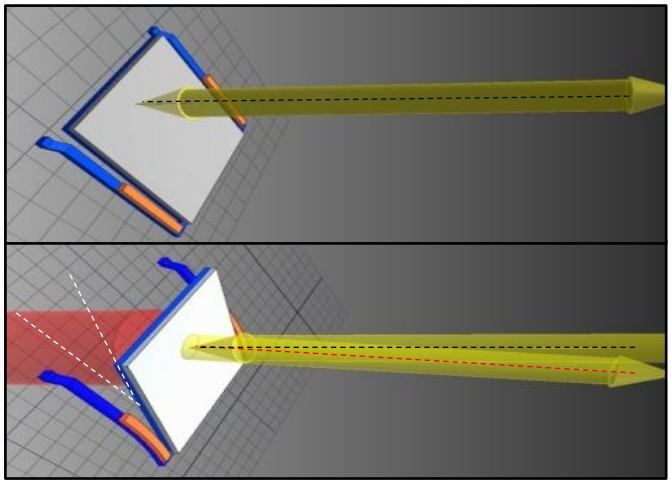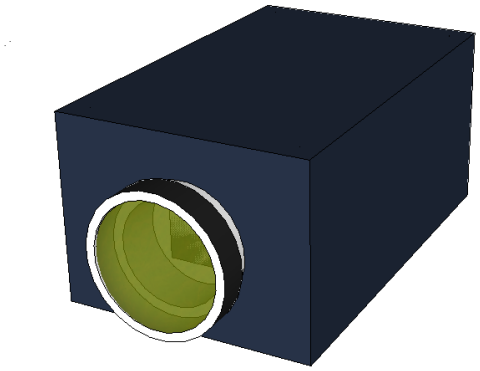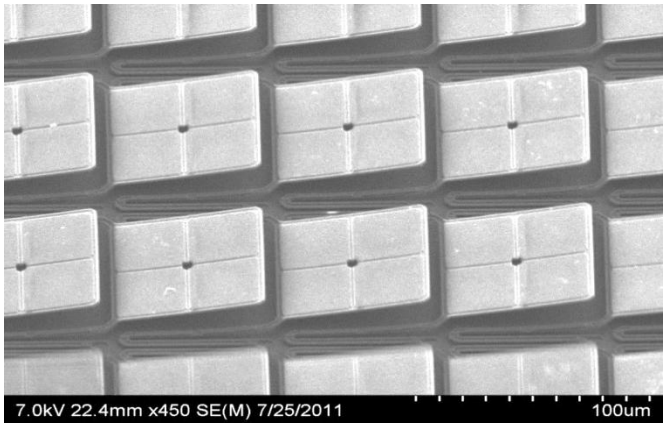
Thank you very much for your attention!